BOXX E-EG

BIKE TRIMM 2009
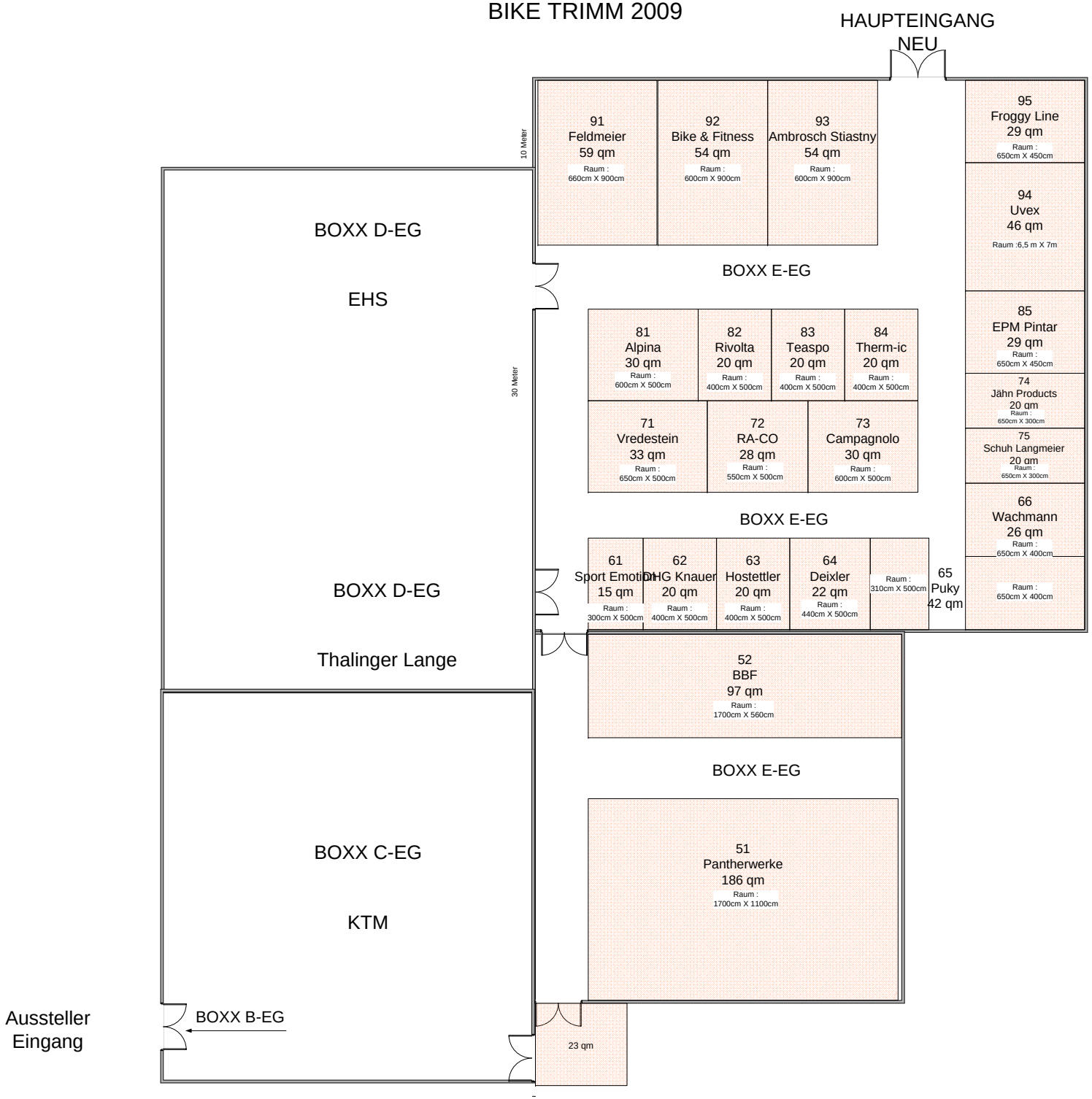
27.-30. September 2009